Technical Description

Model

Selected options

- **ECG80-9, WB 2.80 m**

  Capacity at 900 mm loadcenter up to liftheight 4000 mm

  Duplex standard + FEM 8000 kg
  Duplex standard + SS/FP 7700 kg
  Freelift + FEM 7500 kg
  Freelift + SS/FP 7000 kg
  Duplex standard + forkshaft system 7400 kg
  Freelift + forkshaft system 6700 kg @ 900 mm

  No triplex due to Extended wheel distance
- **Kalmar EGO Cab,**
  complete with all instrumentation
  Warning lamps: Battery charging, blinkers, warning lights, parking brake.
  Display for drive train monitoring system including alarms.
  Only for diesel forklift: Display all parameters of engine and transmission.
  Only for diesel forklift: Display: battery level, engine oil pressure, engine coolant temperature, transmission oil temperature, fuel level, operating time.
  Only for electric forklift: Display parameters of time(12h/24h), cabin temperature(degreesC/F), engine RPM / Hydraulic pump motor RPM, ECO Gaugelevel / Energy consumption kw, Vehicle speed(km/h or mph), Operatings hours, Fuel level / battery state of charge SOC,
  Traction motor left/right temperature (C/F degrees), hydraulic pump motor brake ACC/AC temperature (C/F degrees),
  hydraulic pump motor hydraulics temperature(C/F degrees), Hydarulic oil temperature(C/F degrees),
  Water heater ECC temperature (C/F degrees), Battery voltage, ECO Drive Mode,
  Error history, Acc/de-acceleration.
  Mechanical suspension, 4-way adjustable, cloth driver seat with seat belt.
  Tilt steering wheel with multiple positions.
  Two (2) ergonomically positioned, multi-function levers on steering column.
  -Heavy duty, gear changing/directional switch.
  -Windshield wipers and washers: front , roof, and back pane.
  -Horn and blinkers.
  EHC Electronic heat control. Multi-speed cab heater/defroster for adjustment of heat and air.
  One (1) internal rear view mirror.

  Tilting cab with manual pump, for easy service access.

Cabin

Selected options

- **Globetrotter cab incl. 12 mm roof screen**

  Globetrotter cab with 1720 mm internal height (+200 mm).
  This cab is 200 mm higher than the standard EGO cab.
  This makes access easier for the driver and gives more space when working.
  It also gives imroved view upwards, since the angle of the roof window in some cases creates fewer reflections.

  Including 12 mm roof screen.
- **Elevated cab position**

  Overall cab height = (H6 of selected model +300 mm).

Gives a better visibility of the loadhandling during driving.

- **Electrical left rotatable driver's seat 180°**

  Electric rotating drivers seat, 180° to the left.
  Hydraulic functions active from 0-80°.

  Light: brake, rear, flasher lights are double. Lights in mast and reverse light has vice versa function when turning seat. If High/low beam is choosen this will be double. Extra mirror inside. Only one reverse alarm.
  Medium: brake, rear, flasher light are double. Extra working lights on counterweight and reverse light has vice versa function when turning seat. If High/low beam is choosen this will be double. Extra mirror inside. Extra reverse backalarm.
  Heavy: brake, rear, flasher light are double. Extra working lights on counterweight and reverse light has vice versa function when turning seat. If High/low beam is choosen this will be double. Extra mirror inside. Extra footstep on right side. If reverse alarm is choosen this will be double.
  Extra external mirrors on counterweight.
  Not working together with 3-p seat belt.

  https://youtu.be/6MmE8YbcC8c

- **Air conditioning ECC incl. fresh air filter and tinted screens**

  Electronic climate controlled (ECC) air conditioning, with fresh air filter. Complement standard climate system with cooling system. Tinted screens incl. laminated front screen is included in option.

  Total height (H6) +205 mm for following models: ECG50-90, DCG90-180.

- **Sun visor front screen. Black perforated material.**
  For EGO cab: In combination with VBFS, folded sunscreen limits the backrest

  position.

- **Sun visor roof screen. Black perforated material.**

- **Isringhausen 6830KA/880 air suspended driver´s seat 2 point safety belt +**
  heating,

  landscaping and air-regulated lumbar support and side support.

- **Head rest drivers´ seat**
  For EGO cab: Not recommended for standard chair (= Low backrest)

  In combination with VBFS, limited backrest position.

- **Tuner FM RDS/MP3/USB/AUX/Bluetooth/Hands free-function/Streaming/DAB/CD**
  Design
  Clear and functional Design
  Matt black fixed front
  LCD Display
  Orange illumination
  Tuner
  DAB/DAB+/DMB Tuner
  Worldwide FM RDS tuner / AF / TA / EON / PTY
  LW, MW and FM with AST
  6 Preset Keys
  FM 12, FM-AST 6, MW 6, MW-AST 6, LW 6
  RDS clock

Bluetooth
Cell Phone Headset Functionality (HSP)
Cell Phone Handsfree Mode (HFP)
Play Music from Cell Phone (A2DP, AVRCP)
CD-Player
Scan/Repeat, Tracks/Random, Previous/Next
Electronic Shock Protection (ESP)
USB-Host
Front USB port
Support of USB 1.1/ USB 2.0
Support of MP3/WMA format
Support of Media Storage up to 8GB
Internal Amplifier
Max. Music Power: 4 x 15 Watt
RMS Power: 4 x 10 Watt
4 Sound Presets (Classic, Pop, Rock, Jazz)
Loudness Function
Mute
General
Non volatile memory of settings
Logic ON-OFF function
Rear AUX input
Dimensions (WxHxD) 188x58.5x183mm

DIN/ISO Connectors

- **2 pcs 12 V sockets 2 pcs 24 V sockets**

  24/12 V converter incl, 4 sockets in cab. Placed at bar corners left and

  right side. Possible to switch side of 12V and USB(5V).
- **Weight indicator in display. Deviation 1-3% of rated load.**
  Weight indicator in display is fully functional om mast Duplex std.

  On Duplex freelift and Triplex it is only functional on freelift stage.
- **Drive direction switch, mounted on first lift lever, for forward, neutral and** reverse (F-N-R).
  Facilitates driving fwd/rev. Gives a more efficient run as the driver does not have to let go of the steering wheel.

  The function is activated by a breaker on the steering wheel panel.
- **Ergonomic steering, lever with feedback**
  Functions: off/on button, forward/reverse/neutral, blinker right/left, high/low beam. Optimal for using in narrow working areas.

  Gives a good working environment.
- **Electrical heated and adjustable mirrors on cab**
- **Inside mirror, panorama type**
- **Writing desk with reading lamp and box for A4 paper**
  Flexibel placing, can be placed in different positions in cab.
  LED lamp with battery. Placed to the right in the front. Adjustable sideways

  and for height.
- **Interior floor mat protection**
- **Rotating beacon, adjustable LED type**
  Located by the cabs left rear corner.
  This beacon is adjustable in height which is an advantage when the truck is operating in environments where

  height is limited. Controlled by a button on the dashboard.

Mast

Selected options

- **x kg at x mm load centre up to a lift height of 4000 mm**
  x kg at x mm load centre up to a lift height of 5000 mm

  Lift masts

  Duplex standard - clear view design with robust mast profiles.

  Lift height H4 5000 mm
  Free lift H2 0 mm
  Closed height H3 3685 mm

  Extended height H5 6160 mm

Carriage

Selected options

- **Hydraulic sideshift and fork positioning with excellent visibility, width 2000 mm**
- **Fixation of the cylinders in carriage**

Forks

Selected options

- **Fork dimension 200 x 65 x 2400 mm**
- **Mountings for sideshift / fork positionings forks, roller type**
- **Hydraulic fork levelling. Approximately -80mm +95mm leveling.**

  Fork Levelling on left fork as standard
- **When a specific brand must be choosen for the forklift.**
  Some dimension may not be possible at each supplier.

  Please specify brand.

Steering axle

Heavy duty Kalmar designed steer axle with double-acting steering cylinder.

This provides high strength and durability.

Drivetrain

Power electrics
Two maintenance free high efficient AC-motors for traction and two motors for hydraulic functions.

Drive axle
Two independent hub reductions with integrated parking brake.

Parking brake
Spring actuated parking brake in hub reduction.

Hydraulics

Selected options

- **Extra hydraulic function with hoses above mast.**

  Only 1 extra hydr function when choosing a carrige with sidesh/forkpos
- **Hydraulic cylinder accumulator for lifting function.**

  For attenuation of load when driving. Accumulator is preloaded from factory, fine tuned at customer.

Chassis

Selected options

- **Mud flaps for driving wheel**
- **Mud flaps for steering wheel**
- **Grease nipple for steering wheel on axle cap**

Electrics

24 V electric system
Fully redundant CAN-bus system
Weatherproof connectors
Control units and fuses protected within an easily accessible and weatherproof cabinet on side of chassis.
Braided wire looms protect wire harnesses and do not trap moisture

LED Lighting
Two (2) working lights mounted on mast
Two (2) rear lights, backward direction, mounted on back of cab
Two (2) tail lights/brake lights, mounted on counterweight
Four (4) blinkers
- two mounted on front mud
- two mounted on counterweight

Selected options

- **Two extra headlights mounted at front edge of cab roof forward facing LED**
- **Four extra headlights mounted at rear edge of cab roof in lighting ramp LED**
- **One extra LED working light on tilt cross bar, forward facing**
- **Two extra working lights with protection on front mudguards, forward facing LED**
- **Electrical cab pump in combination with standard pump**
- **EDM, Eco Drive Modes**
  Three different modes: power, normal and eco mode
  Power for maximum productivity
  Normal for good performance and decreased energy consumption (up to 10% lower
  compared to power mode)
  Eco for low energy consumption (up to 20% lower compared to power mode)

  Note! The actual energy consumption is dependent on driver behavior and type

  of application.
- **Increased travel speed from 18-16 to 23-21 km/h.**
- **Modification for battery change system in chassi and battery with pockets.**

  80 mm high fork pockets - outside measurement (for forks 150x60).
- **Battery Hawker Perfect Plus 80-90**
  1495*780*1190 3700 kg 1550 Ah

  Recommended charger: Hawker Charger Ionic, 80 V / 280 A.
  Charge time: approximately 8 hours.

  Central water topping up system.
- **Hawker Charger Ionic, 80 V / 280 A, 63 Amp**

  This charger can charge following batteries:

Battery Hawker Perfect Plus 60-70, 1495*780*990 2900 kg 1240 Ah
Battery Hawker Perfect Plus 75-80, 1495*780*1190 3400 kg 1400 Ah
Battery Hawker Perfect Plus 80-90, 1495*780*990 3400 kg 1240 Ah
Battery Hawker Perfect Plus 80-90,1495*780*1190 3700 kg 1550 Ah.

If other technical data than 400V & 50Hz - please start a SI to secure new values.

- **Reverse alarm**
  Alternative to current clear tone "beeping" reverse alarm.
  Multi frequency, "buzz" tone
  Only heard in the danger zone; contribute less to "noise pollution"

  Easily locatable sound source
- **Blue safety light**
  The blue safety LED light alerts people that the truck is approaching, reducing the risk of accidents. It`s placed at the rear end of the cab roof.
  Blue Safety LED light ensures a visible sharp edged warning signal on the floor for an increased safety environment.
  Bulb: LED Blue

  Lifetime: 20 000 hours. Is one part of the Enhanced Safety Solution package
- **Blue safety light**
  The blue safety LED light alerts people that the truck is approaching, reducing the risk of accidents. It`s placed at the rear end of the cab roof.
  Blue Safety LED light ensures a visible sharp edged warning signal on the floor for an increased safety environment.
  In mast for light in forward direction.

  Bulb: LED Blue

Tyres and rims

The rims are not interchangable between the steer and drive axles.

Colour

Chassis Red KALMAR RED 3000
Cab Grey KALMAR GREY RAL 7011
Mast, carriage, forks Black KALMAR BLACK RAL 7021
Decals/logos/stripes White KALMAR WHITE RAL 7047

Documentation

The following documentation is included as standard:
* Instruction manual
* Maintenance manual
* Individual parts catalog

Selected options

- **Workshop manual on USB memory stick**

Extra equipment

Selected options

- **Automatic central greasing system, 14 points (steering axle 8 points and mast/tilt connections 6 points)**
- **Tilt indicator mounted in mast**
- **Kalmar Insight - software license**
  - Performance management tool for cargo handling operations providing equipment performance information.
  - Kalmar Insight is subject to Kalmar Insight Terms & Conditions, available at https://insight.mykalmar.com/terms-and-conditions.

  FLU must visit the Kalmar Insight Page, where it must be confirmed that a certification has been obtained for the Delivery country of each machine. Without an existing certification, or approval and provision of lead time, this option will not be confirmed to the end customer.
  Note that the license pricing bundled with new equipment sales have fixed NET
  prices.
  -More data on Kalmar Insight (internal site):

  https://sites.google.com/kalmarglobal.com/kalmar-insight/home
- **TV camera with monitor in cab, direction rearward**

Quoted options, Overview

	Description	Quantity
Model	ECG80-9, WB 2800 (Std width 2000 mm dual tyre mounting)	1
	EGO cabin	1
Cabin	Globetrotter cab incl. 12 mm roof screen	1
	Elevated cab 300 mm	1
	Electrical left rotatable driver's seat 180°	1
	Air conditioning ECC incl. fresh air filter tinted screens and laminted front screen	1
	Sun visor front screen. Black perforated material.	1
	Sun visor roof screen. Black perforated material.	1
	Isringhausen 6830KA/880 air suspended driver´s seat 2 point safety belt + heating	1
	Head rest for driver's seat	1
	Tuner FM RDS/MP3/USB/AUX/Bluetooth/Hands free-function/Streaming/DAB/CD	1
	1 pcs 12 V sockets, 1 pcs USB socket with 2 power outlet (5 V) and 2 pcs 24 V sockets	1
	Weight indicator in display	1
	Switch on lift lever for forward and reverse	1
	Ergonomic steering, lever with feedback	1
	External mirrors placed on cab, 2 pcs. Electrical heated and adjustable.	1
	Inside mirror, type panoramic replace std mirror	1
	Writing desk incl. reading light and box for A4 paper	1
	Interior floor mat protection	1
	Rotating beacon adjustable LED type	1
Mast	Duplex standard 75-90 H4 5000 H3 3685	1
Carriage	Sidesh/forkpos W=2000 mm 75-90	1
	Fixation of cylinders in carriage	1
Forks	200*65*2400	1
	Mountings for sidesh/forkpos. carriage, 60-90 (Rollertype)	1
	Fork levelling left fork on ** sidesh/forkpos. carriage 60-90	1
	Define specific brand on forks	1
Hydraulics	Extra hydraulic function incl. hoses per pc	2
	Hydraulic cylinder accumulator for lifting function	1
Chassis	Mud flaps for driving wheels	1
	Mud flaps for steering wheels	1
	Grease nipple for steering wheel on axle cap	1
Electrics	Extra working lights at front cab roof direct. fwd 2 pcs	1
	Extra working lights at rear edge cab roof in lighting ramp 4 pcs	1
	Extra LED working light on tilt cross bar 1 pc	1
	Extra working lights on front mud- guards incl protection LED	1
	Electrical cab pump in combination with std cab pump	1
	EDM Eco Drive Modes	1
	High speed option for ECG50-90	1
	Modification for battery change system, battery with pockets (~+75kg)	1
	Enersys/Hawker Perfect Plus 80-90 1495*780*1190 3700 kg 1550 Ah	1
	Hawker charger Ionic, 80 V / 280 A, 3-phase 400 Volt	1
	Reverse alarm - white sound, multi frequency	1
	Blue safety light backwards via reverse gear	1
	Blue safety light in mast for light forward	1

Documentation	Workshop manual on USB memory stick	1
Extra equipment	Central greasing automatic 14 pts (steering axle/mast 8/6)	1
	Tilt indicator mechanical, placed on mast	1
	Kalmar Insight Software License for 1 year NET price	1
	Reverse camera with monitor in cab, direction rearward	1

Product Images

ECG80-9, WB 2800 (Std width 2000 mm dual tyre mounting)

Globetrotter cab incl. 12 mm roof screen

Elevated cab 300 mm

Electrical left rotatable driver's seat 180°

Air conditioning ECC incl. fresh air filter tinted screens and laminted front screen

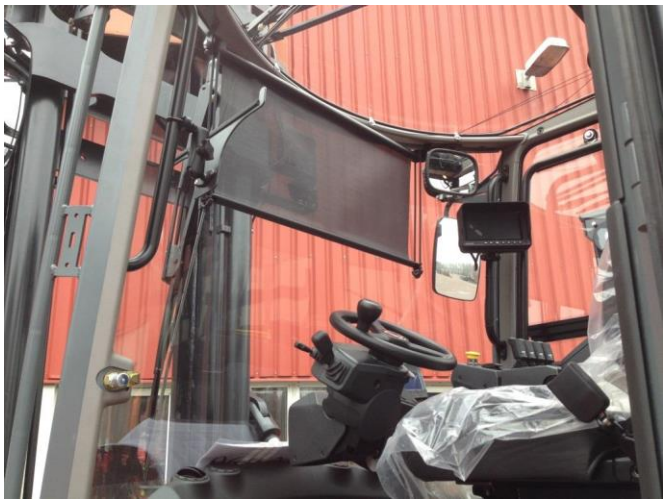

Sun visor front screen. Black perforated material.

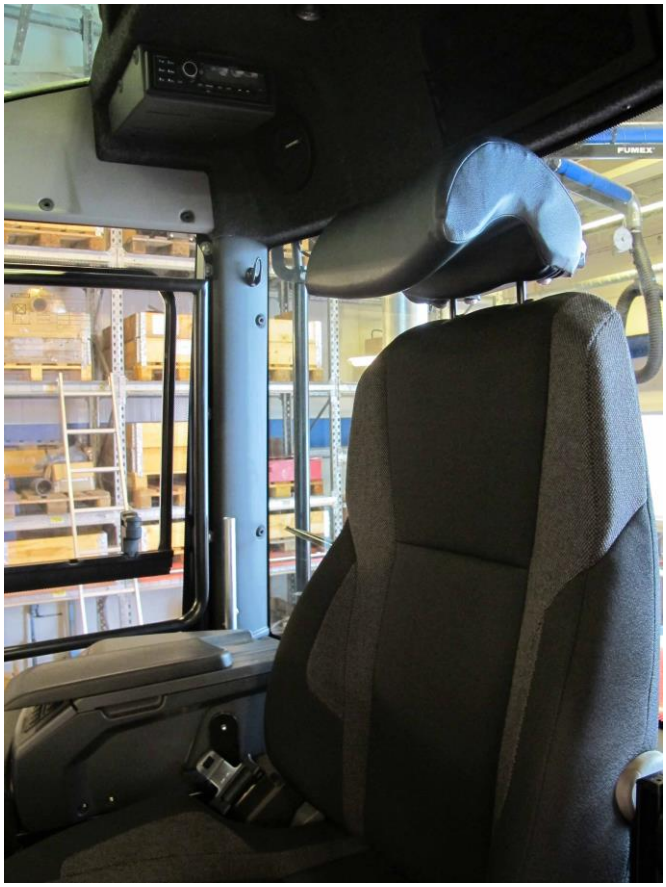

Head rest for driver's seat

Tuner FM RDS/MP3/USB/AUX/Bluetooth/Hands free- function/Streaming/DAB/CD

1 pcs 12 V sockets, 1 pcs USB socket with 2 power outlet (5 V) and 2 pcs 24 V sockets

Weight indicator in display

Switch on lift lever for forward and reverse

Ergonomic steering, lever with feedback

External mirrors placed on cab, 2 pcs. Electrical heated and adjustable.

Inside mirror, type panoramic replace std mirror

Writing desk incl. reading light and box for A4 paper

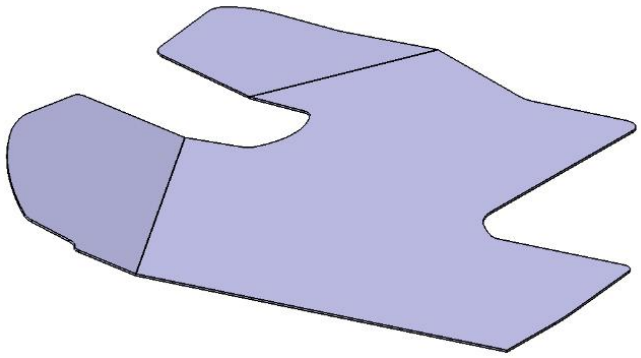

Interior floor mat protection

Rotating beacon adjustable LED type

Duplex standard 75-90 H4 5000 H3 3685

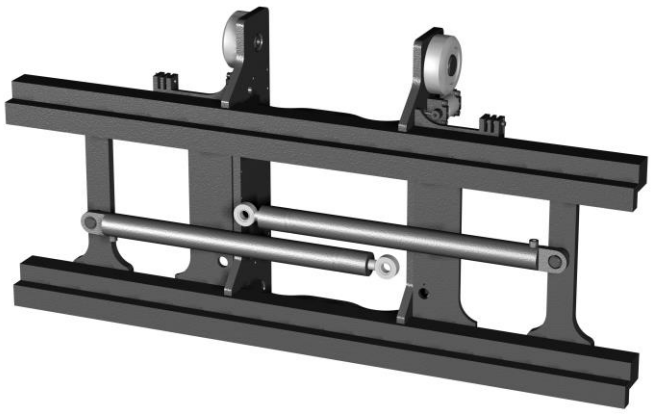

Sidesh/forkpos W=2000 mm 75-90

200*65*2400

Mountings for sidesh/forkpos. carriage, 60-90 (Rollertype)

Fork levelling left fork on ** sidesh/forkpos. carriage 60-90

Mud flaps for driving wheels

Mud flaps for steering wheels

Grease nipple for steering wheel on axle cap

Extra working lights at front cab roof direct. fwd 2 pcs

Extra working lights at rear edge cab roof in lighting ramp 4 pcs

Extra LED working light on tilt cross bar 1 pc

Electrical cab pump in combination with std cab pump

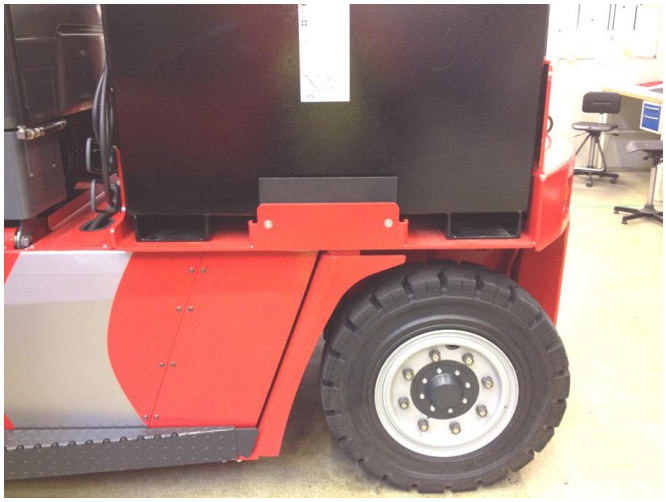

Modification for battery change system, battery with pockets (~+75kg)

Enersys/Hawker Perfect Plus 80-90 1495*780*1190 3700 kg 1550 Ah

Charging time ECG50-90

- Charging time roughly 8h
- Central water top-up system
- Pulse charging (method to shorten final charging phase)

Battery capacity	GNB HP80T160, 160A	GNB HP80T200, 200A	GNB HP80T200, 200A pulse	Hawker Ionic, 210A	Hawker Ionic, 280A
945 Ah	7:46	(6:45)	(5:51)	6:33	(5:28)
1240 Ah	(9:12)	8:00	(7:01)	7:46	(6:29)
1400 Ah	(9:55)	8:38	(7:36)	8:22	(7:00)
1550 Ah	(10:35)	(9:12)	8:08	(8:55)	7:27

Recommended charging system

KALMAR

Hawker charger Ionic, 80 V / 280 A, 3-phase 400 Volt

Blue safety light backwards via reverse gear

Blue safety light in mast for light forward

Workshop manual on USB memory stick

Central greasing automatic 14 pts (steering axle/mast 8/6)

Reverse camera with monitor in cab, direction rearward